YUEDA®

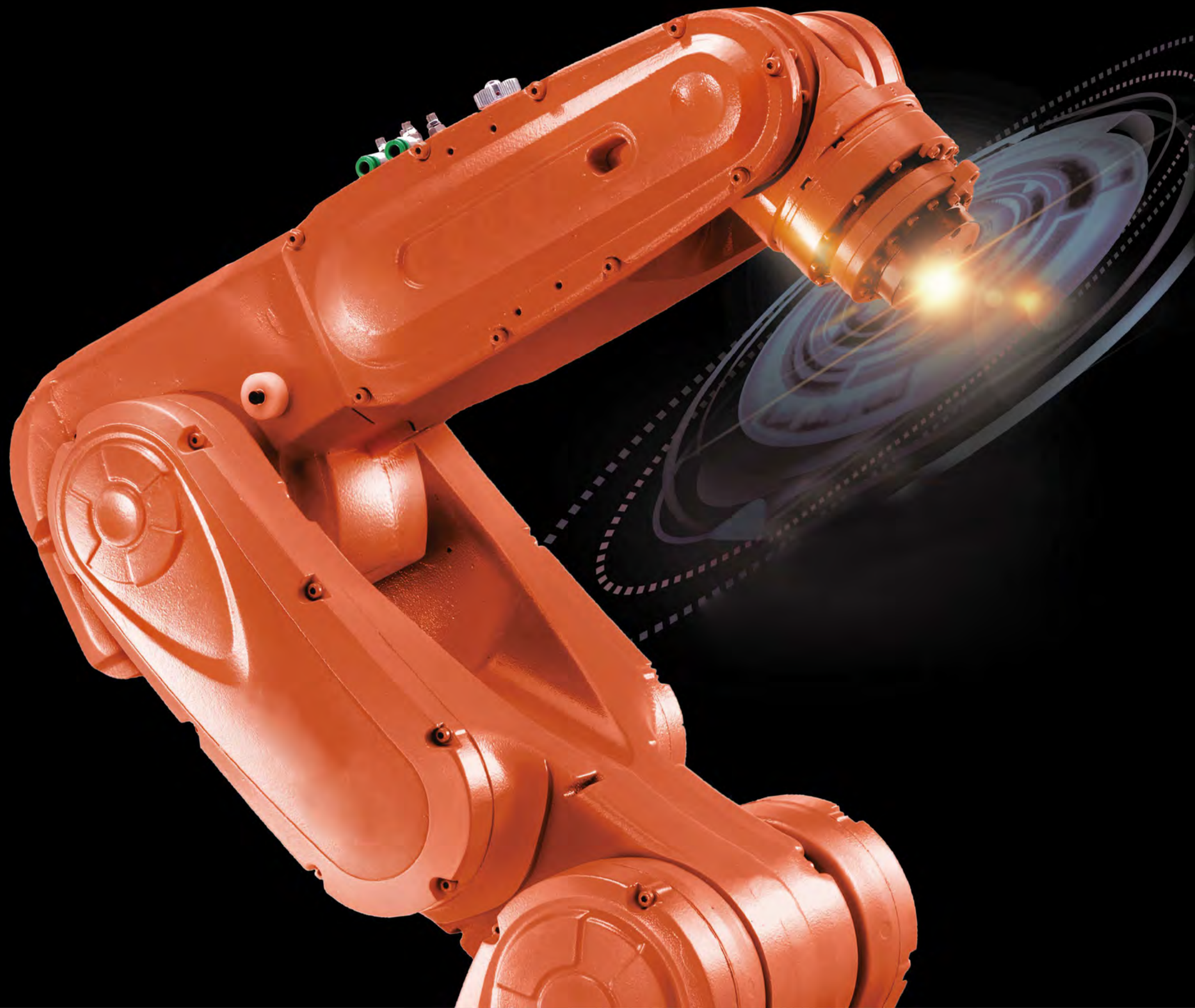

YUEDA®

CHINA 2025

(China Smart Manufacturing 2025)

QJAR MAKING SMART MORE SIMPLE

YUEDA®

PRODUCTS 产品介绍
INTRODUCTION

公司现有3kg/4kg/6kg/10kg/20kg/50kg/210kg六轴、Delta、15kg/30kg/180kg/800kg四轴等各类高性能工业机器人。

Qian Jiang robot company now has six axis robots, including 3kg/4kg/6kg/10kg/20kg/50kg/210kg, four axis robots, including 15kg/30kg/180kg/800kg, delta and other high performance industrial robot .

六轴 Delta 四轴 码垛 喷涂 焊接 上下料 抛光 分拣

QJR6S-1

INDUSTRIAL ROBOT

- 整个系统结构紧凑、机身轻巧、工作空间大、响应速度快、重复定位精度高，可适用于装配、分拣、搬运、上下料等应用。
- The overall system architecture of the robot is compact, lightweight, large workspace, fast response, high repeat positioning accuracy, applicable to assembly, sorting, handling, loading and unloading applications.

机器人外形尺寸和最大动作范围图
Figure Of Robot Shape Size And Maximum Motion Range

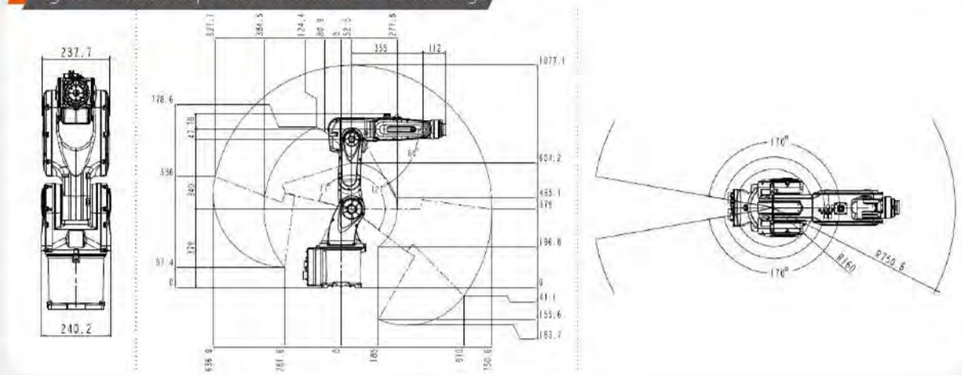

机器人末端安装尺寸图
Dimension Chart Of Robot End - Mounted

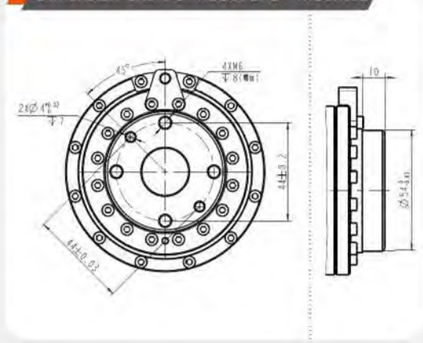

机器人底座安装尺寸图
Mounting Dimensions Of Robot Base

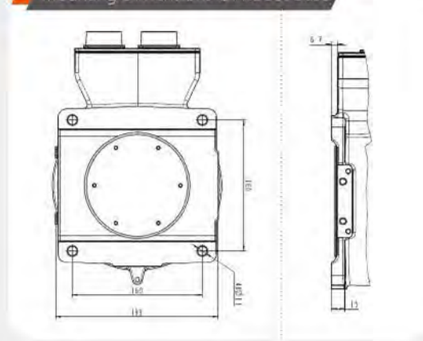

机器人基本规格表
Technical Specifications Of Robot

机构形态 Mechanism	垂直多关节 Vertical multi-joint robot	
轴数 Axis Number	6	
有效载荷 Payload	6kg	
重复定位精度 Repeat Positioning	±0.02mm	
最大臂展 Max Armspan	750.6mm	
防护等级 Protection Degree	IP67	
本体重量 Robot Body Weight	39kg	
机械限位范围 Motion Range	J1	±172°
	J2	+132°，-82°
	J3	+67°，-191°
	J4	±190°
	J5	±123°
	J6	±360°
最大速度 Max Speed	J1	412°/s
	J2	412°/s
	J3	429°/s
	J4	429°/s
	J5	538°/s
	J6	790°/s

允许扭矩 Allowable Torque	J4	11 N·m
	J5	11 N·m
	J6	4.3 N·m
惯性力矩 Inertia Moment	J4	0.47 kg·m²
	J5	0.47 kg·m²
	J6	0.2 kg·m²
安装环境 Installation Environment	温度 TEMP	0~45 ℃
	湿度 HUM	20%~80% RH (不结露) No condensation
	振动 NVH	<4.9m/s² (0.5G)
	其他 Others	避免易燃、腐蚀性气体和液体；Avoid flammable, corrosive gases and liquids; 避免接触水、油、粉尘等；Avoid contact with water, oil, dust, etc.; 勿接近电器噪音源。Do not approach electrical noise source.
电源容量 Power Capacity	1.5kVA	
电控柜尺寸 Cabinet Size	375*421*211mm	
电控柜重量 Cabinet Weight	15kg	
电源 Source	单相220V +10% -10% One-phase	
安装方式 Installation	地面、吊顶 Wall、Ceiling	

QJRH4-1A

INDUSTRIAL ROBOT

- 该款主要用于弧焊焊接，具有高可靠性和优异的性价比。其特点如下：
- 采用中空型结构手臂、手腕，焊接电缆内置，可在狭窄空间焊接作业，重量轻便，结构紧凑。
- 通过安装机身盖罩，可以放心使用于各种恶劣的环境（防尘和防滴）。
- 工作空间大、运行速度快、重复定位精度高，适用于对焊缝质量有较高要求的焊接应用。

- The robot is mainly used for arc welding, with high reliability and excellent value for money. Its features are as follows :
- Hollow structural arms and wrists, built-in welding cable, able to operate welding procedure in narrow space,lightweight, compact structure.
- By installing protective cover, you can rest assured that it can be used in a variety of harsh environments (dust and drip) .
- Large workspace, fast running speed, high repeat positioning accuracy, suitable for quality demanding welding applications.

机器人外形尺寸和最大动作范围图
Figure Of Robot Shape Size And Maximum Motion Range

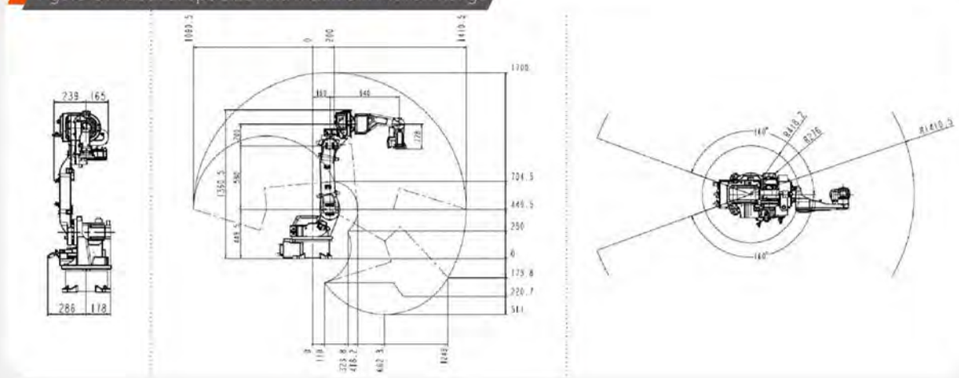

机器人末端安装尺寸图
Dimension Chart Of Robot End - Mounted

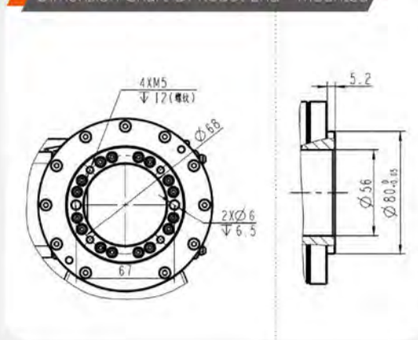

机器人底座安装尺寸图
Mounting Dimensions Of Robot Base

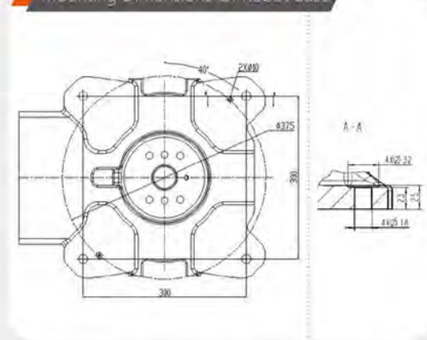

机器人基本规格表
Technical Specifications Of Robot

机构形态 Mechanism	垂直多关节 Vertical multi-joint robot	
轴数 Axis Number	6	
有效载荷 Payload	4kg	
重复定位精度 Repeat Positioning	±0.03mm	
最大臂展 Max Armspan	1410.5mm	
防护等级 Protection Degree	IP30	
本体重量 Robot Body Weight	150kg	
机械限位范围 Motion Range	J1	±168°
	J2	+150°，-89°
	J3	+85°，-111°
	J4	±167°
	J5	+58°，-217°
	J6	±360°
最大速度 Max Speed	J1	201°/s
	J2	201°/s
	J3	235°/s
	J4	350°/s
	J5	355°/s
	J6	481°/s

允许扭矩 Allowable Torque	J4	10.51 N·m
	J5	10.51 N·m
	J6	2.94 N·m
惯性力矩 Inertia Moment	J4	0.38 kg·m²
	J5	0.38 kg·m²
	J6	0.03 kg·m²
安装环境 Installation Environment	温度 TEMP	0~45 ℃
	湿度 HUM	20%~80% RH (不结露 No condensation)
	振动 NVH	<4.9m/s² (0.5G)
	其他 Others	避免易燃、腐蚀性气体和液体；Avoid flammable, corrosive gases and liquids; 避免接触水、油、粉尘等；Avoid contact with water, oil, dust, etc.; 勿接近电器噪音源。Do not approach electrical noise source.
电源容量 Power Capacity	2.7kVA	
电控柜尺寸 Cabinet Size	580*600*960mm	
电控柜重量 Cabinet Weight	130kg	
电源 Source	三相四线380V +10% -10% Three-phase four-wire	
安装方式 Installation	地面、吊顶 Wall、Ceiling	

QJR6-1

INDUSTRIAL ROBOT

- 只需短短数小时的安装、示教、调试，机器人即可投入日常生产。
- 设计高度紧凑，可灵活选择地面安装或倒置安装。
- 工作空间大、运行速度快、重复定位精度高，适用于焊接、喷涂、上下料、搬运、分拣、装配等应用，适用范围广。

- Just a few hours of installing, teaching, debugging, the robot can be quickly put into daily production.
- The design is highly compact, flexible installation with ground or inverse position.
- Large workspace, fast running speed, high repeat positioning accuracy, suitable for welding, spraying, loading and unloadinghandling, sorting, assembly and other wide range of applications.

机器人外形尺寸和最大动作范围图
Figure Of Robot Shape Size And Maximum Motion Range

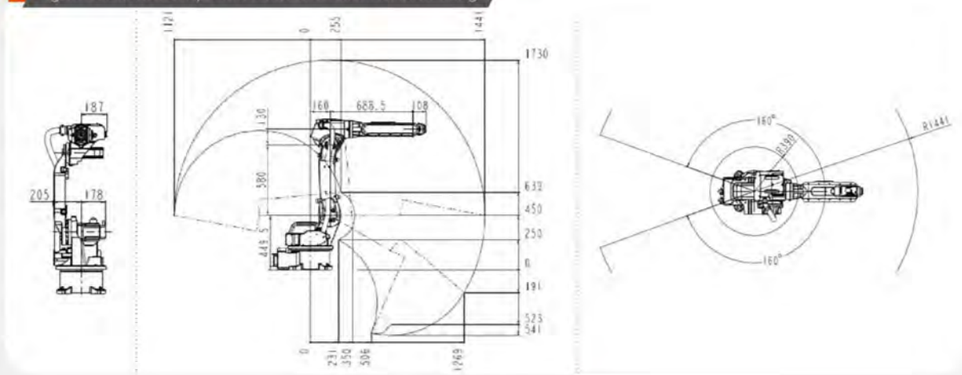

机器人末端安装尺寸图
Dimension Chart Of Robot End - Mounted

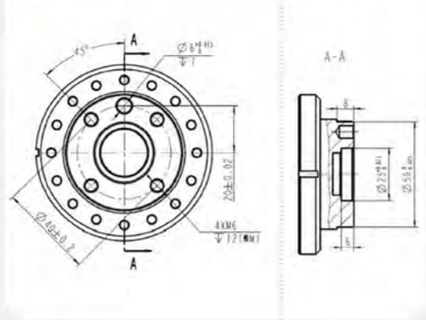

机器人底座安装尺寸图
Mounting Dimensions Of Robot Base

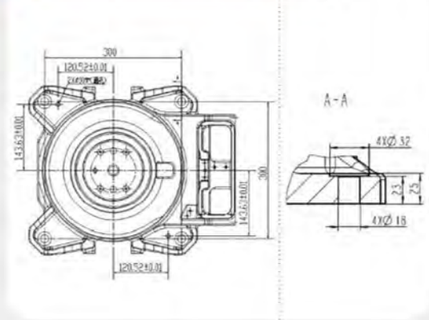

机器人基本规格表
Technical Specifications Of Robot

机构形态 Mechanism	垂直多关节 Vertical multi-joint robot	
轴数 Axis Number	6	
有效载荷 Payload	6kg	
重复定位精度 Repeat Positioning	±0.03mm	
最大臂展 Max Armspan	1441mm	
防护等级 Protection Degree	IP30	
本体重量 Robot Body Weight	170kg	
机械限位范围 Motion Range	J1	±168°
	J2	+150°，-89°
	J3	+87°，-111°
	J4	±170°
	J5	±125°
	J6	±360°
最大速度 Max Speed	J1	201°/s
	J2	178°/s
	J3	201°/s
	J4	430°/s
	J5	430°/s
	J6	602°/s

允许扭矩 Allowable Torque	J4	13.1 N·m
	J5	13.1 N·m
	J6	5.9 N·m
惯性力矩 Inertia Moment	J4	0.3 kg·m²
	J5	0.3 kg·m²
	J6	0.06 kg·m²
安装环境 Installation Environment	温度 TEMP	0~45 ℃
	湿度 HUM	20%~80% RH (不结露 No condensation)
	振动 NVH	<4.9m/s² (0.5G)
	其他 Others	避免易燃、腐蚀性气体和液体， Avoid flammable, corrosive gases and liquids; 避免接触水、油、粉尘等； Avoid contact with water, oil, dust, etc.; 勿接近电器噪音源。 Do not approach electrical noise source.
电源容量 Power Capacity	2.7kVA	
电控柜尺寸 Cabinet Size	580*600*960mm	
电控柜重量 Cabinet Weight	130kg	
电源 Source	三相四线380V +10% -10% Three-phase four-wire	
安装方式 Installation	地面、吊顶 Wall、Ceiling	

QJR6-3

INDUSTRIAL ROBOT

- 机械结构简单且紧凑，可灵活选择地面安装或倒置安装。
- 臂展接近2米，工作空间大，可对较大型产品进行焊接作业。
- 速度快、重复定位精度高，适用于焊接、上下料、搬运、装配等应用，适用范围广。

- The mechanical structure is simple and compact. You can select ground or inverse installation.
- The robot reach is nearly 2 meters. Large working space, suitable for large products in the welding operation.
- Fast running speed, high repeat positioning accuracy, suitable for welding, loading and unloading, handling, assembly and other applications.

机器人外形尺寸和最大动作范围图
Figure Of Robot Shape Size And Maximum Motion Range

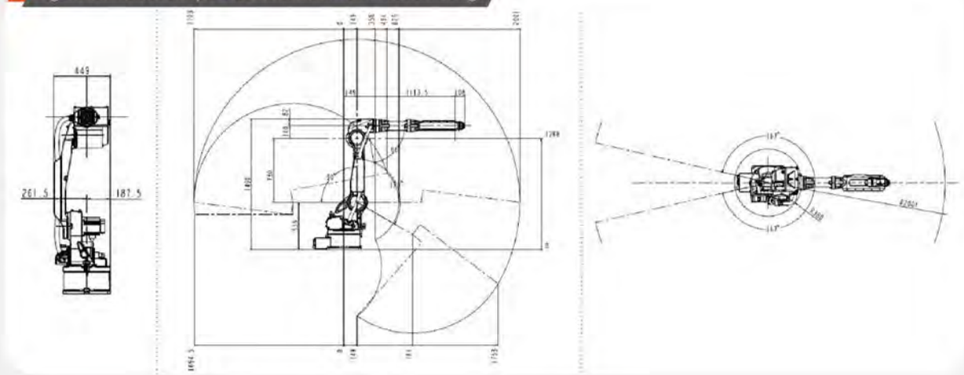

机器人末端安装尺寸图
Dimension Chart Of Robot End - Mounted

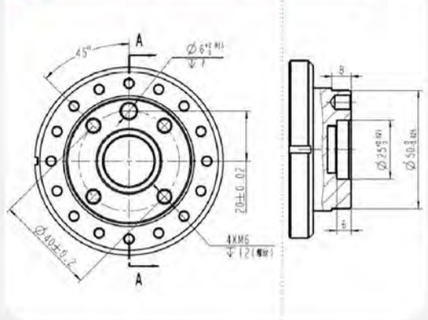

机器人底座安装尺寸图
Mounting Dimensions Of Robot Base

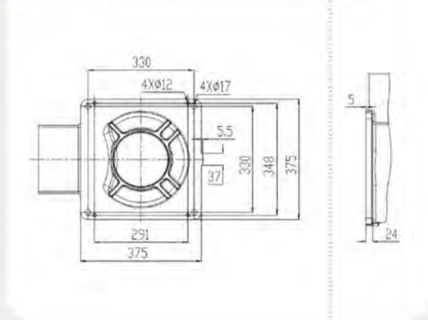

机器人基本规格表
Technical Specifications Of Robot

机构形态 Mechanism	垂直多关节 Vertical multi-joint robot	
轴数 Axis Number	6	
有效载荷 Payload	6kg	
重复定位精度 Repeat Positioning	±0.05mm	
最大臂展 Max Armspan	2001mm	
防护等级 Protection Degree	IP30	
本体重量 Robot Body Weight	255kg	
机械限位范围 Motion Range	J1	±172°
	J2	+166°，-100°
	J3	+83°，-92°
	J4	±170°
	J5	±125°
	J6	±360°
最大速度 Max Speed	J1	172°/s
	J2	172°/s
	J3	201°/s
	J4	430°/s
	J5	447°/s
	J6	573°/s

允许扭矩 Allowable Torque	J4	8.81 N·m
	J5	8.81 N·m
	J6	3.14 N·m
惯性力矩 Inertia Moment	J4	0.2 kg·m²
	J5	0.2 kg·m²
	J6	0.03 kg·m²
安装环境 Installation Environment	温度 TEMP	0~45 ℃
	湿度 HUM	20%~80% RH (不结露) No condensation
	振动 NVH	<4.9m/s² (0.5G)
	其他 Others	避免易燃、腐蚀性气体和液体，Avoid flammable, corrosive gases and liquids; 避免接触水、油、粉尘等，Avoid contact with water, oil, dust, etc.; 勿接近电器噪音源。Do not approach electrical noise source.
电源容量 Power Capacity	3.8kVA	
电控柜尺寸 Cabinet Size	580*600*960mm	
电控柜重量 Cabinet Weight	130kg	
电源 Source	三相四线380V +10% -10% Three-phase four-wire	
安装方式 Installation	地面、吊顶 Wall、Ceiling	

QJR10-1

INDUSTRIAL ROBOT

- 有效载荷10kg，臂展1.67米，设计结构紧凑，可灵活选择地面安装或倒置安装。
- 工作空间大、运行速度快、重复定位精度高，适用于焊接、喷涂、上下料、搬运、分拣、装配等应用，适用范围广。

- Payload 10kg, reach distance of 1.67 meters, the design is highly compact, flexible installation with ground or inverse position.
- Large workspace, high running speed, high repeat positioning accuracy, suitable for welding, spraying, loading and unloading,handling, sorting, assembly and other wide range of applications.

机器人外形尺寸和最大动作范围图
Figure Of Robot Shape Size And Maximum Motion Range

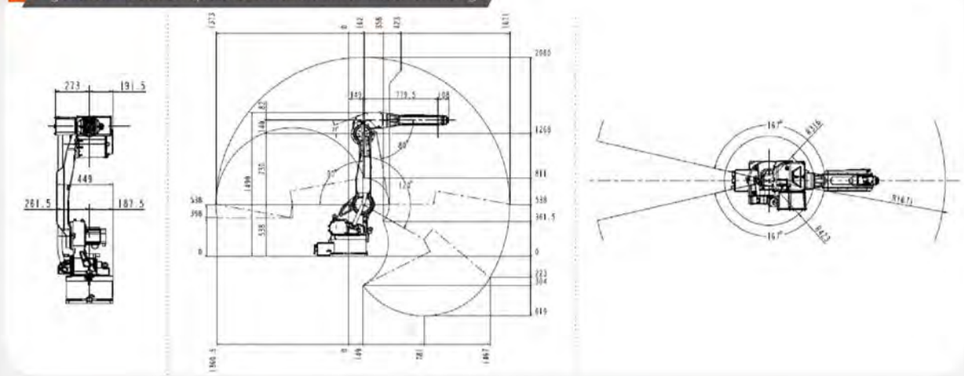

机器人末端安装尺寸图
Dimension Chart Of Robot End - Mounted

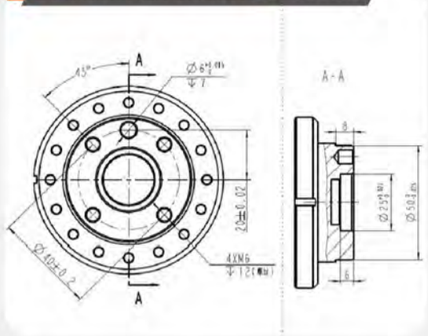

机器人底座安装尺寸图
Mounting Dimensions Of Robot Base

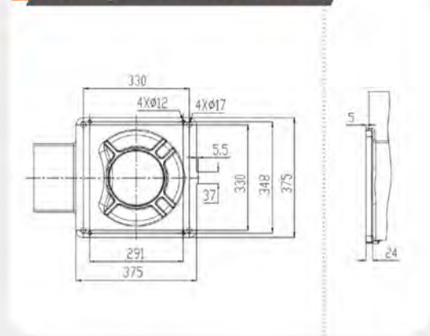

机器人基本规格表
Technical Specifications Of Robot

机构形态 Mechanism	垂直多关节 Vertical multi-joint robot		允许扭矩 Allowable Torque	J4	24.6 N·m
轴数 Axis Number	6			J5	24.6 N·m
有效载荷 Payload	10kg			J6	9.8 N·m
重复定位精度 Repeat Positioning	±0.05mm		惯性力矩 Inertia Moment	J4	0.63 kg·m²
最大臂展 Max Armspan	1671mm			J5	0.63 kg·m²
防护等级 Protection Degree	IP30			J6	0.1 kg·m²
本体重量 Robot Body Weight	250kg		安装环境 Installation Environment	温度 TEMP	0~45 ℃
机械限位范围 Motion Range	J1	±172°		湿度 HUM	20%~80% RH (不结露 No condensation)
	J2	+166°，-107°		振动 NVH	<4.9m/s² (0.5G)
	J3	+83°，-92°		其他 Others	避免易燃、腐蚀性气体和液体，Avoid flammable, corrosive gases and liquids; 避免接触水、油、粉尘等，Avoid contact with water, oil, dust, etc.; 勿接近电器噪音源。Do not approach electrical noise source.
	J4	±170°			
	J5	±125°			
	J6	±360°			
最大速度 Max Speed	J1	172°/s	电源容量 Power Capacity	3.3kVA	
	J2	172°/s	电控柜尺寸 Cabinet Size	580*600*960mm	
	J3	183°/s	电控柜重量 Cabinet Weight	130kg	
	J4	430°/s	电源 Source	三相四线380V +10% -10% Three-phase four-wire	
	J5	430°/s	安装方式 Installation	地面、吊顶 Wall、Ceiling	
	J6	584°/s			

QJR10-2

INDUSTRIAL ROBOT

- 有效载荷10kg，臂展2米，设计结构紧凑，可灵活选择地面安装或倒置安装。
- 工作空间大、运行速度快、重复定位精度高，适用于焊接、喷涂、上下料、搬运、分拣、装配等应用，适用范围广。

- Payload 10kg, reach distance of 2 meters, the design is highly compact, flexible installation with ground or inverse position.
- Large workspace, high running speed, high repeat positioning accuracy, suitable for welding, spraying, loading and unloading,handling, sorting, assembly and other wide range of applications.

机器人外形尺寸和最大动作范围图
Figure Of Robot Shape Size And Maximum Motion Range

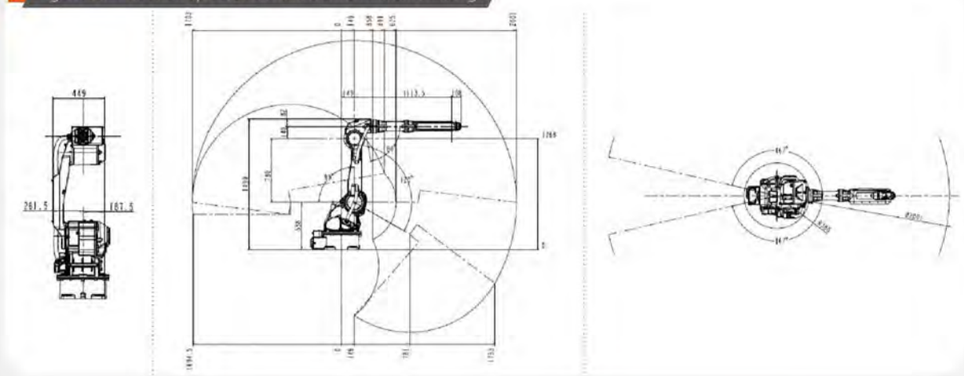

机器人末端安装尺寸图
Dimension Chart Of Robot End - Mounted

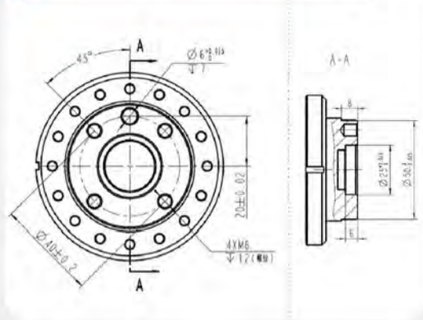

机器人底座安装尺寸图
Mounting Dimensions Of Robot Base

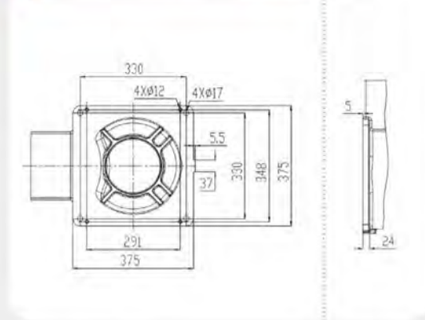

机器人基本规格表
Technical Specifications Of Robot

机构形态 Mechanism	垂直多关节 Vertical multi-joint robot	
轴数 Axis Number	6	
有效载荷 Payload	10kg	
重复定位精度 Repeat Positioning	±0.05mm	
最大臂展 Max Armspan	2001mm	
防护等级 Protection Degree	IP67	
本体重量 Robot Body Weight	275kg	
机械限位范围 Motion Range	J1	±172°
	J2	+158°，-110°
	J3	+83°，-92°
	J4	±170°
	J5	±125°
	J6	±360°
最大速度 Max Speed	J1	150°/s
	J2	150°/s
	J3	183°/s
	J4	430°/s
	J5	430°/s
	J6	602°/s

允许扭矩 Allowable Torque	J4	24.6 N·m
	J5	24.6 N·m
	J6	9.8 N·m
惯性力矩 Inertia Moment	J4	0.63 kg·m²
	J5	0.63 kg·m²
	J6	0.1 kg·m²
安装环境 Installation Environment	温度 TEMP	0~45 ℃
	湿度 HUM	20%~80% RH (不结露 No condensation)
	振动 NVH	<4.9m/s² (0.5G)
	其他 Others	避免易燃、腐蚀性气体和液体； Avoid flammable, corrosive gases and liquids; 避免接触水、油、粉尘等； Avoid contact with water, oil, dust, etc.; 勿接近电器噪音源。 Do not approach electrical noise source.
电源容量 Power Capacity	4.2kVA	
电控柜尺寸 Cabinet Size	580*600*960mm	
电控柜重量 Cabinet Weight	130kg	
电源 Source	三相四线380V +10% -10% Three-phase four-wire	
安装方式 Installation	地面、吊顶 Wall、Ceiling	

QJRB20-1

INDUSTRIAL ROBOT

- QJRB20-1是市面上国内首款防爆装置已通过国家认证的喷涂机器人。
- 此款机器人通过对垂直多关节结构进行优化设计，具有简单紧凑的机械结构。
- 采用总线结构，扩展应用方便，运行速度快、重复定位精度高，适用于码垛、搬运、上下料、激光切割、喷涂、抛光打磨等应用，适用范围广。

- QJRB20-1 is the first national certified spraying robot with an explosion-proof feature on the market.
- Through the optimization of the structure of the vertical multi-joint robot, it has a simple and compact mechanical structure.
- High running speed, high repeat positioning accuracy, suitable for palletizing, handling, loading and unloading, laser cutting, spraying, polishing, and other wide range of applications.

机器人外形尺寸和最大动作范围图
Figure Of Robot Shape Size And Maximum Motion Range

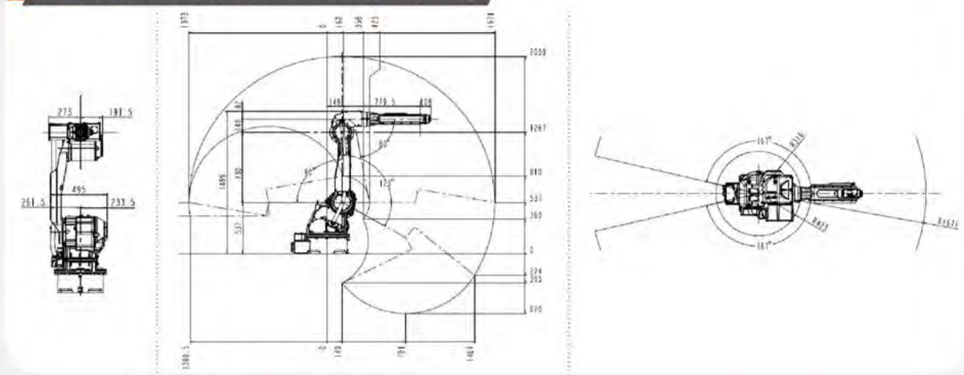

机器人末端安装尺寸图
Dimension Chart Of Robot End - Mounted

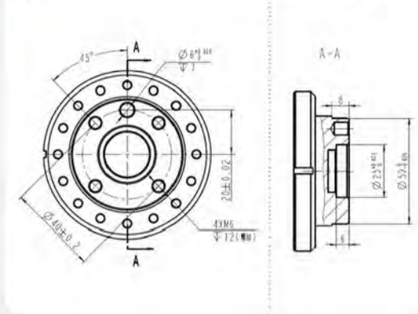

机器人底座安装尺寸图
Mounting Dimensions Of Robot Base

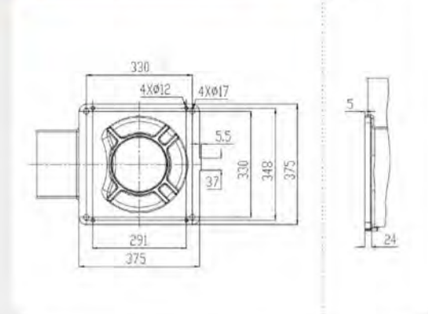

机器人基本规格表
Technical Specifications Of Robot

机构形态 Mechanism	垂直多关节 Vertical multi-joint robot		允许扭矩 Allowable Torque	J4	38.81 N·m
轴数 Axis Number	6			J5	38.81 N·m
有效载荷 Payload	20kg			J6	29.4 N·m
重复定位精度 Repeat Positioning	±0.05mm		惯性力矩 Inertia Moment	J4	3 kg·m²
最大臂展 Max Armspan	1671mm			J5	3 kg·m²
防护等级 Protection Degree	IP67，ExdpxIIBT4Gb			J6	2.2 kg·m²
本体重量 Robot Body Weight	270kg		安装环境 Installation Environment	温度 TEMP	0~45 ℃
机械限位范围 Motion Range	J1	±172°		湿度 HUM	20%~80% RH (不结露) No condensation
	J2	+158°，-110°		振动 NVH	<4.9m/s² (0.5G)
	J3	+83°，-92°		其他 Others	避免易燃、腐蚀性气体和液体；Avoid flammable, corrosive gases and liquids; 避免接触水、油、粉尘等，Avoid contact with water, oil, dust, etc.; 勿接近电器噪音源。Do not approach electrical noise source.
	J4	±170°			
	J5	±125°			
	J6	±360°			
最大速度 Max Speed	J1	150°/s			
	J2	150°/s			
	J3	150°/s			
	J4	281°/s			
	J5	292°/s			
	J6	372°/s			

	非防爆 Non explosion-proof	防爆 Explosion-proof
电控柜尺寸 Cabinet Size	580*600*960mm	650*750*1150mm
电控柜重量 Cabinet Weight	130kg	120kg
电源 Source	三相四线380V +10% -10% Three-phase four-wire	三相五线380V +10% -10% Three-phase five-wire
安装方式 Installation	地面、吊顶 Wall、Ceiling	

QJR20-2

INDUSTRIAL ROBOT

- 此款机器人通过对垂直多关节结构进行优化设计，具有简单紧凑的机械结构。
- 采用总线结构，扩展应用方便，运行速度快、重复定位精度高，适用于码垛、搬运、上下料、激光切割、喷涂、抛光打磨等应用，适用范围广。
- Through the optimization of the structure of the vertical multi-joint robot, it has a simple and compact mechanical structure.
- High running speed, high repeat positioning accuracy, suitable for palletizing, handling, loading and unloading, laser cutting, spraying, polishing, and other wide range of applications.

机器人外形尺寸和最大动作范围图
Figure Of Robot Shape Size And Maximum Motion Range

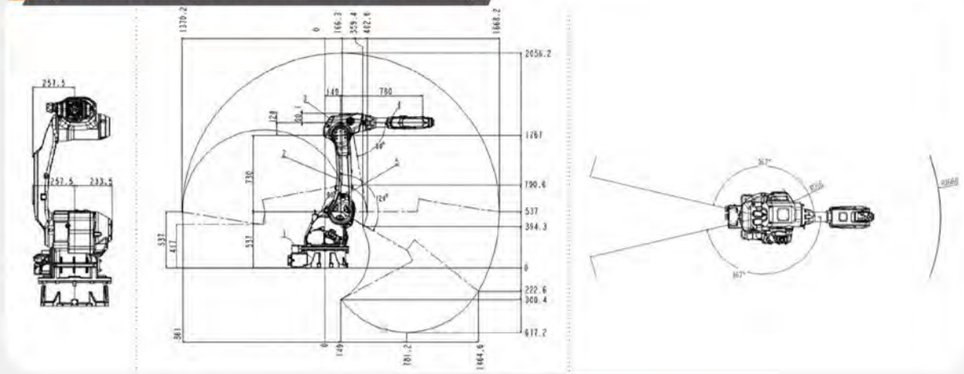

机器人末端安装尺寸图
Dimension Chart Of Robot End - Mounted

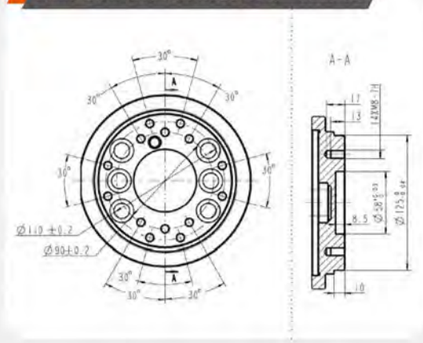

机器人底座安装尺寸图
Mounting Dimensions Of Robot Base

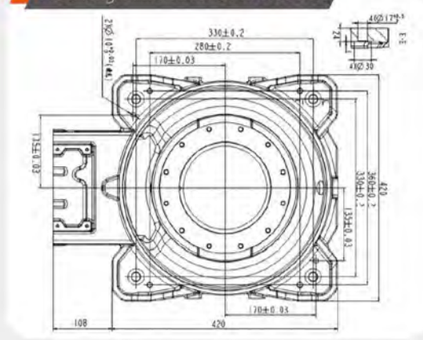

机器人基本规格表
Technical Specifications Of Robot

机构形态 Mechanism	垂直多关节 Vertical multi-joint robot	
轴数 Axis Number	6	
有效载荷 Payload	20kg	
重复定位精度 Repeat Positioning	±0.05mm	
最大臂展 Max Armspan	1668mm	
防护等级 Protection Degree	IP67、ExdpxIIBT4Gb	
本体重量 Robot Body Weight	270kg	
机械限位范围 Motion Range	J1	±172°
	J2	+147°，-115°
	J3	+83°，-98°
	J4	±167°
	J5	±115°
	J6	±360°
最大速度 Max Speed	J1	155°/s
	J2	155°/s
	J3	172°/s
	J4	355°/s
	J5	355°/s
	J6	355°/s

允许扭矩 Allowable Torque	J4	43.8 N·m
	J5	43.8 N·m
	J6	19.6 N·m
惯性力矩 Inertia Moment	J4	1 kg·m²
	J5	1 kg·m²
	J6	0.2 kg·m²
安装环境 Installation Environment	温度 TEMP	0~45 ℃
	湿度 HUM	20%~80% RH (不结露 No condensation)
	振动 NVH	<4.9m/s² (0.5G)
	其他 Others	避免易燃、腐蚀性气体和液体；Avoid flammable, corrosive gases and liquids; 避免接触水、油、粉尘等；Avoid contact with water, oil, dust, etc.; 勿接近电器噪音源。Do not approach electrical noise source.
电源容量 Power Capacity	3.6kVA	
电控柜尺寸 Cabinet Size	580*600*960mm	
电控柜重量 Cabinet Weight	130kg	
电源 Source	三相四线380V +10% -10% Three-phase four-wire	
安装方式 Installation	地面、吊顶 Wall、Ceiling	

焊接电源
WELDING SOURCE

QJ350R、QJ500R(水冷)

QJ350R、QJ500R(水冷)特点如下：

- 超凡的混合气体碳钢焊接性能；
- 实现熔滴过度的精细控制；
- 具有熔深控制功能；
- 特别适用于钢结构、重工、压力容器等行业。

The features of QJ350R and QJ500R (water cooling) are as follows:

- Excellent welding properties of mixed gas carbon steel;
- Fine control of excessive droplet;
- With weld penetration control;
- Especially suitable for high-performance welding of carbon steel in structural steel, heavy industry, and pressure vessel.

QJ350RL

QJR350RL特点如下：

- 特殊短路过渡控制；
- 可实现 0.8-3mm的碳钢板、不锈钢、镀锌板的超低飞溅焊接具有熔深控制功能；
- 通过增加对工件的热输入，使得焊道宽度扩大，减小焊缝的余高，改善了薄板焊缝成型；
- 不仅实现了小电流薄板领域的高速焊接，也实现了中高电流领域的低飞溅化。

QJ350RL features are as follows:

- Special short-circuit control;
- Ultra-low welding spatter for 0.8-3mm carbon steel plate, stainless steel, galvanized sheet;
- By increasing the thermal input on the workpiece, the width of the weld line is expanded, the weld height is reduced, and the weld forming is improved;
- High-speed low current welding on thin plates, low welding spatter for high current welding.

变位机
POSITIONER

- 变位机可实现水平、垂直±180°的回转，可将任何一段焊缝转到最合适的焊接位置，实现复杂零部件的焊接，保证最好的焊接质量；
- 变位机的回转由机器人控制柜控制，焊接过程中，能实现机器人与变位机协调运动，无需变位机单独配控制柜驱动，节省了空间。
- Positioner is able to achieve 180° of horizontal and vertical movement. The machine is able to rotate any workpiece to the most appropriate welding position, in order to achieve optimum welding results for complex parts;
- The rotation of the machine is controlled by the robot control cabinet. During the welding process, the control cabinet can coordinate the movement of the robot with the rotation machine, without the need of a separate control cabinet.

QJ1P500-1（单轴动力单元）

变位机基本规格表 Technical Specifications Of Positioner

重复定位精度 Repeat Positioning	±0.1mm	允许扭矩 Allowable Torque	969 N·m
额定负载 Payload	500kg	卡具定位直径 Fixture Radius	φ250
额定转速 Rated Speed	160°/s	外形尺寸 Size	340*310*445mm
机械限位范围 Motion Range	±360°	重量 Weight	71kg

QJ1P500-2（单轴头尾）

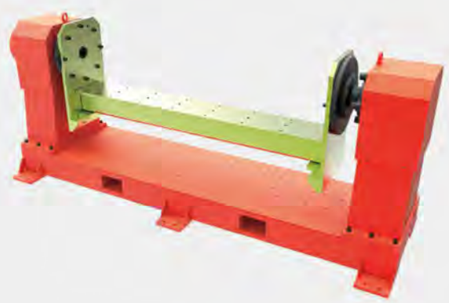

变位机基本规格表 Technical Specifications Of Positioner

重复定位精度 Repeat Positioning	±0.1mm	允许扭矩 Allowable Torque	969 N·m
额定负载 Payload	500kg	卡具安装长度 Fixture Length	1200~3000mm
额定转速 Rated Speed	118°/s	外形尺寸 Size	2900*700*1200mm
机械限位范围 Motion Range	±360°	重量 Weight	680kg

变位机
POSITIONER

QJ2P500-1（双轴U型）

变位机基本规格表 Technical Specifications Of Positioner

重复定位精度 Repeat Positioning	±0.1mm		外形尺寸 Size	1100*600*750mm	
额定负载 Payload	500kg		重量 Weight	580kg	
卡具安装直径 Fixture Radius	φ500cm		卡具安装高度 Fixture Height	750mm	
最大旋转速度 Max Speed	J1	108°/s	允许扭矩 Allowable Torque	J1	1065N·m
	J2	56.7°/s		J2	680N·m

QJ2P500-2（双轴L型）

变位机基本规格表 Technical Specifications Of Positioner

重复定位精度 Repeat Positioning	±0.1mm		外形尺寸 Size	1750*950*1300mm	
额定负载 Payload	500kg		重量 Weight	1150kg	
卡具安装直径 Fixture Radius	φ800mm		卡具安装高度 Fixture Height	750mm	
最大旋转速度 Max Speed	J1	44.5°/s	允许扭矩 Allowable Torque	J1	1365N·m
	J2	118°/s		J2	680N·m

QJ3P500-1（三轴回转）

变位机基本规格表 Technical Specifications Of Positioner

重复定位精度 Repeat Positioning	±0.1mm		允许扭矩 Allowable Torque	1490N·m	
额定负载 Payload	500~2000kg		回转半径 Max Speed	J1	φ1900mm
外形尺寸 Size	4000*1500*1900mm			J2/J3	φ650mm
卡具安装长度 Fixture Length	1200~3000mm		限位范围 Max Speed	J1	±180°
回转高度 Payload	850mm			J2/J3	±360°
重量 Weight	2500kg		最大速度 Max Speed	J1	57°/s
				J2/J3	118°/s

变位机、地轨
POSITIONER、Ground Rail

QJ3P500-2（三轴翻转）

变位机基本规格表 Technical Specifications Of Positioner

重复定位精度 Repeat Positioning	±0.1mm		允许扭矩 Allowable Torque	1490N·m	
额定负载 Payload	500~2000kg		回转半径 Max Speed	J1	φ900mm
外形尺寸 Size	3800*1800*1900mm			J2/J3	φ650mm
卡具安装长度 Fixture Length	1200~3000mm		限位范围 Max Speed	J1	±180°
回转高度 Payload	850mm			J2/J3	±360°
重量 Weight	3000kg		最大速度 Max Speed	J1	57°/s
				J2/J3	118°/s

QJ-AR500

地轨基本规格表 Technical Specifications Of Ground Rail

最大行驶速度 Max Driving Speed	1.5m/s	最大负载 Max Payload	500kg
最大加速度 Max Acceleration	1.2m/s²	行程 Running Distance	2~30m
重复定位精度 Repeat Positioning	±0.05mm	机器人安装高度 Mounting Height	460-500mm

- 本地轨具有速度快、精度高、运行平稳、维护简单的特性，能够很好的满足机器人地轨的使用要求；
- 根据客户需要，可采用风琴罩或钣金防护，具有良好的防尘、防污、防水性；
- 针对于机床工件上下料、焊接、装配、喷涂、检验、铸造、锻压、热处理、金属切削加工，搬运、码垛等工作，满足工厂自动化生产线的实际需要。

- The rail has the characteristics of high speed, high accuracy, smooth operation and simple maintenance, It can be used well with the robot.
- According to customer needs, It can be equipped with an organ cover or sheet metal for protection, It has good dustproof, antifouling and waterproof.
- It can be applied to the application fields of machine tools, such as material, welding, assembly, spraying, inspection, casting, forging, heat treatment, metal cutting, handling, palletizing, etc.

控制柜
CABINET

常规柜体

- 节约空间体积；
- 常规柜体在基本六轴驱动器基础上，可扩展至8轴；
- 散热效率高；
- 预留多种外扩接口，扩展方便；

Standard Cabinet

- Space saving;
- Expandable to 8-axis on the basis of 6-axis.
- Excellent heat-dissipation efficiency;
- Variety of interfaces are available for ease of expansion;

大型柜体

- 大型柜体可扩展至9轴；
- 散热效率高；
- 预留多种外扩接口，扩展方便；
- 大型柜体可内嵌防爆型机器人的气动部件，将防爆工艺直接安装至柜内，节约空间体积。

Large cabinets

- Large cabinet expand able to 9-axis;
- Excellent heat-dissipation efficiency;
- Variety of interfaces are available for ease of expansion;
- Can be used for housing the pneumatic parts of the explsion-proof robot. This allows the explosion-proof technology to be directly installed in the cabinet.

紧凑型柜体

小型、体积仅为380x368x200mm；

轻量、环保，可靠性高，保养方便，接插方便，外部扩展接口丰富。

Compact Cabinet

- Dimension 380x368x200mm;
- Small, lightweight, environmental friendly, reliable, easy to maintain, variety of expansion ports.

控制器
CONTROLLER

QJRC-10

QJRC-20

I/O BOARD

- 钱江机器人控制器采用开发式系统构架，以及紧凑型的无风扇X86工控机和高速伺服总线技术，支持机器视觉系统，支持多种应用工艺软件包，如弧焊应用软件包、喷涂应用软件包、码垛应用软件包、传送带跟踪软件包。

- Qianjiang robot controller is based on an open system architecture with a compact fanless X86 computer and EtherCAT bus with the capability of supporting vision system. The controller supports a variety of application process packages, such as arc welding, palletizing and conveyor belt tracking.

网络型示教器

- 钱江机器人系统示教器根据分布网络的设计理念，采用服务端+多客户端的通讯构架方式，能够支持单示教盒适配多个机器人控制单元，便于工厂管理；
- 示教盒采用嵌入式+实时系统的系统架构方式，除了具备实时响应能力以及高性价比以外，还可以集成3D动画引擎，支持在线显示虚拟仿真动画，另外，还可以扩展多种人机交互方式。

- Qianjiang robot system is based on distribution network concept, using an architecture with single server communicating with multiple clients. This allows the support of single teaching pendant with multiple robot control unit, which is advantageous for plant management;
- The teach pendant adopts an embedded and real-time system architecture that provides a cost-effective way for real-time response ability. It can also be integrated with 3D animation engine, support for online virtual simulation animation, and in addition, extend the various modes of human-machine interaction.